Appendix H of ECP-05 AHU for HAHU

Published 10 2023

Appendix H of the ECP-05 for
HYGIENIC AIR HANDLING UNITS

Appendix H of ECP-05 AHU for HAHU

Published 10 2023

Revision 10.2-2023 – October (This version cancels and replaces any previous versions)
Approval date: 20/10/2023
Comes into effect from: 26/10/2023

Modifications as against last version:

No	Modifications	Section	Page
1	*Precision of cleaning methodology (R2, R20)*	*V.1.a*	*5*
2	*Sufficient space needed only for non-removable components, and replace the "quickly removable" with "removable") (R20, R21, R22, R23, R25)*	*V.2.e*	*9*
3	*Precision of removable definition. Specific removal system for components with a weight higher than 25kg. The disassembly and assembly procedure shall be described in the IOM (R21)*	*V.2.e*	*9*
4	*Precision of easily accessible definition. Removal of the panels shall be repeatable. If the sizes are not fulfilled, the cleaning procedure as defined in the IOM shall be demonstrated during the onsite audit (R22)*	*V.2.e*	*9*
5	*Wording modification for the R58. Minimum ePM10 50% filter shall be installed before the silencer on the supply airstream side (R58)*	*V.3.g*	*17*
6	*General wording*	*All*	*All*

This document is strictly reserved for use in the Certification Programmes of Eurovent Certita Certification. Reproduction or translation of any part of the document is forbidden without written permission from Eurovent Certita Certification.

Published by Eurovent Certita Certification
34 rue Laffitte
75009 Paris, FRANCE

Tel: + 33 1 75 44 71 61
E-mail: d.lambert@eurovent-certification.com

TABLE OF CONTENTS

I. PURPOSE 4
II. SCOPE 4
III. DEFINITIONS 4
IV. TESTING REQUIREMENTS 4
IV.1 Standards for Hygienic AHU 4
V. RATING REQUIREMENTS 5
V.1 General 5
a. Planning 5
b. Manufacture 5
c. Shipment 5
V.2 Unit Housing 6
a. Metallic Materials 6
b. Non-Metallic Materials 7
c. General AHU Arrangement 7
d. Inner Casing Surface 7
e. General Requirements to the Casing for Inspection, Maintenance and Cleaning (IMC) 9
f. Requirement regarding filter maintenance 11
g. Other requirements related to casing 11
V.3 Air Treatment 12
a. Filter 12
b. Cooling and Heating Coil 13
c. Humidifier 13
d. Dehumidifier 14
e. Heat Recovery System (HRS) 14
f. Fans 15
g. Silencer 16
VI. CERTIFIED PERFORMANCE REQUIREMENTS 17
VII. TOLERANCES 17
APPENDIX A. ACCESS AND SPACE 18

I. PURPOSE

The purpose of this Appendix is to establish definitions and specifications for testing and rating of Hygienic Air Handling Unit (HAHU) for the related Eurovent Certified Performance (ECP) certification programme, in accordance with TCR ECP-05 in force.

II. SCOPE

See Technical Certification Rules ECP-05 in force, § I.1.

III. DEFINITIONS

For definitions regarding the certification scheme refer to Certification Manual. Most of the definitions listed in the AHU Technical Certification Rules (ref: ECP 05) apply to the Hygienic AHU. The following definitions are specific to the hygienic AHU, for all other definitions please refer to the AHU Techincal Certification Rules (ECP 05).

IOM: Installation & Operational Manual

IMC: The IMC (Inspection, Maintenance and Cleaning) works comprise the component itself, the relating guides or frames, the casing ranges directly upstream and downstream of the component and any instruments installed inside the chamber of the relating component.

IMC Space: A 3-dimensional space according to Figure 2 with depth IMC-D, height IMC-H and length IMC-L, which is at the disposal for IMC works at the inside of the AHU. For easily removable components as defined under R22 (detailed under V.2e), the free space after removal of the relating component is considered. In and against the air direction the IMC length (IMC-L) ends at the next (installed) component. The IMC space shall be mainly free from installations and shall allow to reach the AHU component itself, the relating guides or frames, the casing ranges directly upstream and downstream of the component and any instruments installed inside the chamber of the relating component.

Depending on the AHU size and the access opening size, different ways to enter inside the AHU can be distinguished as shown in Figure 2 and APPENDIX A.

IV. TESTING REQUIREMENTS

IV.1 Standards for Hygienic AHU

In addition to the standards listed in the AHU Rating Standards (ECP 05), all performance ratings presented by manufacturers shall comply with the following standards:

- EN ISO 846:2019 – Method A and C: “Evaluation of the action of microorganisms” for all non-metallic material
- EN ISO 2896:2001: “Rigid cellular plastics – Determination of water absorption” for water absorbance in case of foamed sealants use.
- EN 10088-3:2014 Standard 1.4301 / AISI 304 for “Stainless steel”
- EN 1993-1-2:2005 Eurocode 3: “Design of steel structures” for corrosion resistance
- DIN 1946/4-6.5.1:2018 for Aluminium and coating properties
- EN 16890:2016 for medium and fine filters
- EN 1822:2019 for high efficiency filters
- EN ISO 12944-1:2017 for corrosion resistance

V. RATING REQUIREMENTS

The hygienic option of the AHU programme proposes 3 levels of certification defined as Level 1 to Level 3. The higher the rating, the more hygienic the AHU unit.

As a reference only:

- Level 1 would be appropriate for schools, offices and hotels
- Level 2 for hospital (except rooms with high hygienic requirements)
- Level 3 for food processes, pharmaceutical, white rooms, operating theatres and equivalent.

The previous list is not exhaustive and must be used as a reference only.

Final customer/user who has complete and detailed knowledge of the building application shall decide which Hygienic rating level is appropriate.

V.1 General

a. Planning

R1. Coating, paints and sealing materials releasing harmful substances or odors are not allowed. Likewise, insulating materials, porous linings, or seals used within the airflow are prohibited.

Refer to DIN 1946:2018 section 6.5.1

Level 1, 2 & 3: Requirement applied

R2. Cleaning methodology *(including any specific cleaning tools to support reduced IMC - access & space)*, general arrangement and dimension of the AHU including location of doors and/or hatches shall be including in the IOM of the product.

Level 1, 2 & 3: Requirement must be included in the IOM of the product.

b. Manufacture

R3. All surfaces which are in contact with air stream shall be cleaned and particles removed after manufacture (e.g. with electrical broom, steam or mop)

Level 1: Procedure shall be included in the quality system of the manufacturer.

Level 2 & 3: Level 1 and Final disinfection requirement after mounting the modules of unit (before installing the filters) on site must be included in the IOM.

c. Shipment

R4. Flat packing delivery of units is not allowed.

In order to comply with restricted buildings accesses or transportation limits, units might be delivered in sections, blocks or sub-assemblies to be assembled together on site. In that case, the assembly method shall be explained in the IOM or the site assembly to be performed by personal trained by the manufacturers.

Level 1, 2 & 3: Procedure shall be included in the quality system of the manufacturer.

In case of blocks or sub-assemblies' delivery, requirements must be included in the IOM of the manufacturer or evidence showing that a qualified person is in charge of the assembly shall be provided.

R5. After manufacture, the AHU shall be fully dry, clean and properly packed with weather protection in order to protect the unit during shipment. The same rule applies for the components.

Level 1, 2 & 3: Procedure shall be included in the quality system of the manufacturer.

R6. Every component of the ventilation system shall be protected from potential damage and contamination after manufacture and this until the installation on site of the unit.

Level 1, 2 & 3: Procedure shall be included in the quality system of the manufacturer.

R7. Every component shall be covered before shipment to avoid any dust infiltration. Manufacturer shall ensure that the components are in clean and dry conditions.

Level 1, 2 & 3: Procedure shall be included in the quality system of the manufacturer.

R8. During the on-site storage every door, hatch and other type of openings (if applicable) shall be sealed.

Level 1, 2 & 3: Requirement must be included in the IOM of the product.

R9. Manufacturer shall ensure that no residue remains within the air flow after manufacture.

Level 1, 2 & 3: Procedure shall be included in the quality system of the manufacturer.

V.2 Unit Housing

a. Metallic Materials

R10. Metallic material shall be corrosion resistant, minimum requirements for internal surfaces are described under each “Level”.

Internal surfaces include the following:

a) Inside panels / door metallic surface
b) Metallic parts which hold components (rails, holding constructions, etc.). Housings of the components (filter frame, coil frame, heat exchanger frame, fan frame)
c) Ventilation component itself (coil fins, heat exchanger fins, fan’s impeller)
d) Motors

Fixing elements should correspond regarding corrosion resistance to the surfaces as indicated above.

If coating or painting is used, refer to coating section (R1)

Level 1 & 2: Minimum materials resistance according to corrosivity class C3 in accordance with EN ISO *12944-2:2017* or aluminum

AND Drain pans shall be in stainless steel with at least 18% Cr and 8% Ni (for instance EN steel 1.4301 - AISI 304; minimum corrosion resistance class CRC: II (2) according EN 1993-1-4:1995 EUROCODE 1-4) or aluminum (at least AlMg; in accordance with DIN 1946/4-6.5.1:2018)

Level 3: Minimum materials resistance according to corrosivity class C4 in accordance with EN ISO 12944-*2*:2017 or aluminum

AND Floor and drain pans shall be in stainless steel with at least 18% Cr and 10% Ni (for instance EN steel 1.4401 - AISI 316; minimum corrosion resistance class CRC: II (2) according EN 1993-1-4:1995 EUROCODE 1-4) or aluminum (at least AlMg; in accordance with DIN 1946/4-6.5.1:2018)

b. Non-Metallic Materials

R11. For all non-metallic parts excluding paints, cables and control equipment but including sealants, gaskets, filters, etc. (non exhaustive list) with surface in contact with the air > 5 cm² (summed up surface per each part type). Proof by test reports from hygiene institute as per EN ISO 846:2019 shall be presented. The maximum allowed growth rate for microorganisms according to Table 4 and 5 of ISO 846:2019 is 1 (0, 1a, 1b or 1c are accepted) and C (no growth or slight growth).

Level 1 & 2: Requirement applied

Level 3: Requirement applied and the cabling to electrical components shall not cross another section (or component space) than the space dedicated to this specific component.

R12. Porous or open cell materials as linings, insulating materials (except acoustic baffles) sealants and rubbers in contact with the airflow are not permitted.

Level 1, 2 & 3: Requirement applied

c. General AHU Arrangement

R13. The H-AHU certification is related to AHU within the scope of theTechnical Certification Rules ECP 05, but with the following precisions:

a) For the H-AHU certification are considered only floor mounted AHU with horizontal air flows (no vertical units).

b) For the maintenance are considered only AHU with lateral inspection doors / hatches.

Level 1, 2 & 3: Requirement applied

R14. Every component selected in the software (air filters, heat exchangers (energy recovery systems and coils, droplet separators, fans, humidifiers, dehumidifiers, silencers, dampers) shall be installed within/inside the AHU.

Level 1, 2 & 3: Requirement applied

d. Inner Casing Surface

R15. Except for doors and hatches grooves, joints and gaps between panels and gaps between panels and frame profiles shall have maximum width of 3mm.

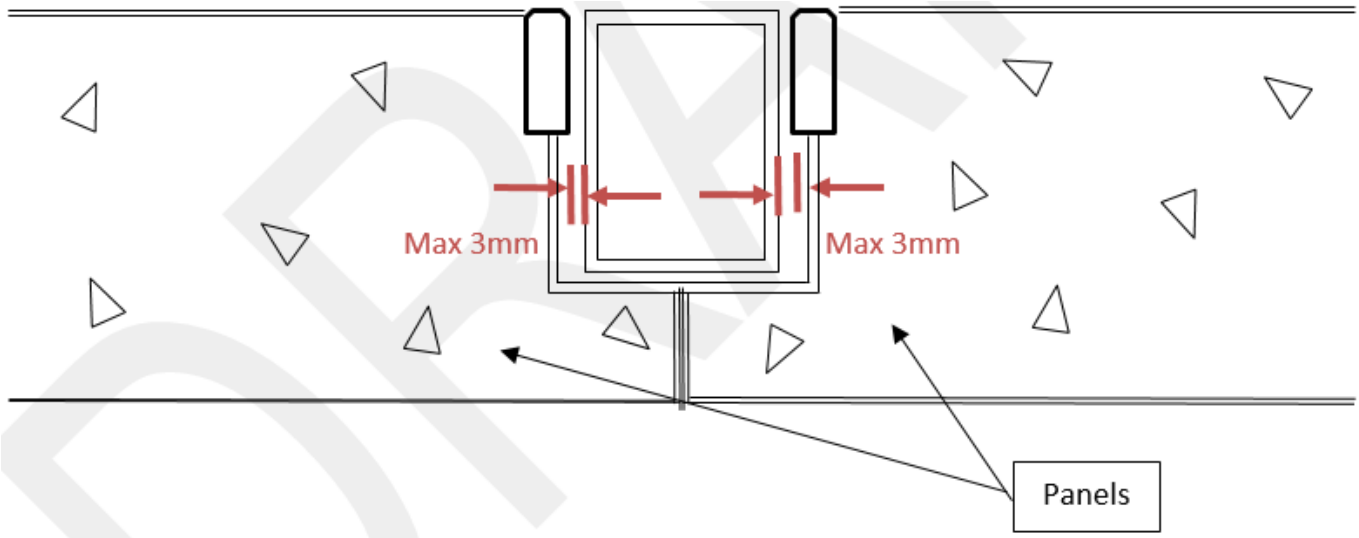

Figure 1: Gaps between panels and frame profiles schematic

Level 1, 2 & 3: Requirement applied

R16. Except for doors and hatches grooves, joints and gaps between panels and also gaps between panels and frame profiles at the floor shall be sealed to create a smooth and closed surface with a material according toV.2b.

Level 1: No Requirements

Level 2 & 3: Requirement applied

R17. Except for doors and hatches grooves, joints and gaps between panels and also gaps between panels and frame profiles at the complete inner casing surface shall be sealed to create a smooth and closed surface with a material according toV.2b. **Level 1 & 2:** No requirements

Level 3: Requirements applied

R18. Sealants for lids, hatches and doors for IMC shall be located directly at the inside casing surface to avoid any gap or groove.

Sealants for lids, hatches and doors shall be easily replaceable or otherwise installed in a mechanically protected position.

Sealants fixed by direct chemical bonding (FIPFG: Formed in Place Foam Gaskets) are considered as not replaceable. For proper mechanical protection these sealants shall be applied on the lid, hatch or door leaf (but not on the door frame).

Mechanically fixed sealants (inserted in or clamped on a profile) are considered as replaceable, thus they can be located on the lid, hatch or door leaf as well as on the frame.

For the sealants of lids, hatches and doors the requirements of R11 and R12 shall be fulfilled independently from the surface of the sealant in the airstream.

For the fixation of sealants for lids, hatches and doors:

Level 1 & 2: Mechanical fixing (inserted in or clamped on a profile) or direct chemical bonding (FIPFG: Formed in Place Foam Gaskets) or fixation by a bi -adhesive film or a glue are allowed.

Level 3: Mechanical fixing (inserted in or clamped on a profile) or direct chemical bonding (FIPFG: Formed in Place Foam Gaskets) are allowed. Sealants fixed with a bi adhesive (film or a glue) are not allowed.

R19. To reduce the risk of injuries for the maintenance staff and to ensure safe and proper cleaning at the inside of the AHU, fasteners (e.g. self-tapping screws ...) shall not point inside the unit, sharp edges and open rivets are not allowed inside the housing.

Level 1, 2 & 3: Requirement applied

e. General Requirements to the Casing for Inspection, Maintenance and Cleaning (IMC)

R20. The design shall be such that a maintenance person can reach manually at any inner casing surface for:

a) Cleaning with a sponge, a mop *(with or without handle)* or similar. No residue shall remain after cleaning.

b) Access to all components and related fixing elements.

For the necessary IMC works, any component (air filters, heat exchangers, energy recovery systems and coils, droplet separators, fans, humidifiers, dehumidifiers, dampers, silencers, water trays of humidifiers and condense trays of cooling sections or energy recovery systems) in the air stream shall be easily accessible (R22 & R23) (installed in the AHU) **OR** alternatively removable (R21).

In case of non removable component, sufficient space (R24) shall be available in the AHU allowing proper IMC. The underlined notions are specified in the following requirements (R21, R22, R23 and R24).

Level 1, 2 & 3: Requirement applied

R21. Any component as defined under R20 shall be removable.

A component designed for the purpose of IMC as " removable" shall have a weight of maximum 25 kg, *except if there is a specific removal system as identified in the IOM allowing a component removal by only one person.*

Removable means that *the disassembly and assembly procedure shall be described in the IOM.*

Level 1, 2 & 3: Requirement applied

R22. Any component as defined under R20 shall be easily accessible:

AHU components require a quick and easy access to the unit inside through access openings. As access opening for IMC, only a (removable) hatch or a hinged door is accepted, according to the following definition:

a) The opening of any access opening with hinge (door or hatch) shall be possible within 20 seconds.

b) For hatches (not hinged access doors) the maximum allowed weight is 25 kg and the maximum allowed width of the hatch is 600 mm (except for silencers). The hatches shall be equipped with handles for proper handling. *The removal of these panels shall be repeatable, refer to R18 for consideration of replaceable sealants.*

c) For minimum free opening width [OW as per Figure 2] and minimum free opening height [OH according Figure 2] of the access opening, please refer to APPENDIX A. *If these minimum size requirements are not fulfilled, then the cleaning procedure as defined in the IOM shall be demonstrated during the onsite audit (not applicable for HRS and coils).*

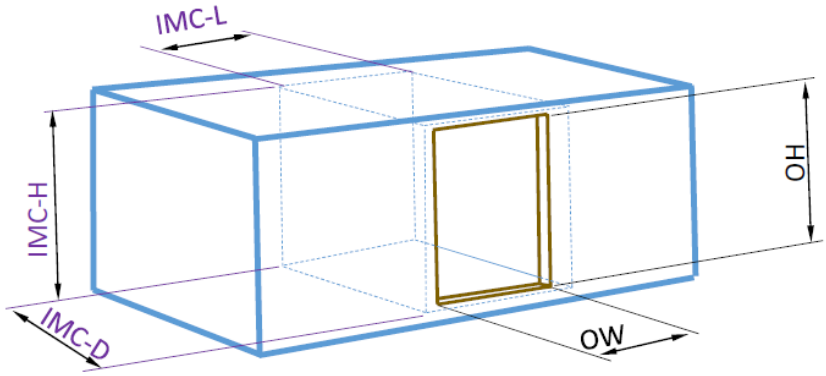

IMC-D: IMC Depth
IMC-H: IMC Height
IMC-L: IMC Length

OW: Opening Width
OH: Opening Height

Figure 2: Opening dimensions – IMC dimensions

Note: Panels which shall be unscrewed for the access are not accepted. At access openings, no installations shall be fixed (cables, instruments....) which hinder the quick opening.

Level 1, 2 & 3: Requirements applied + refer to APPENDIX A for 'Access and Space' requirements.

R23. For any component defined under R20, an easy access shall be ensured **from both sides** (upstream and downstream):

For components, which are removable according to R21, the component itself is deemed to be accessible from both sides. Nevertheless, the relating guides or frames, the casing ranges directly upstream and downstream of the component and any instruments installed inside the chamber of the related component shall also be accessible for these removable components.

For any component considered as removable according to R21 the empty space of the component itself can be utilised as part of the inspection section of the non removable components located next to a removable component.

Level 1: No requirements

Level 2 & 3: Requirement applied

R24. Sufficient space: To allow the necessary IMC work, sufficient space shall be available. The IMC space is considered sufficient if the minimum space requirements defined in APPENDIX A are satisfied.

Level 1, 2 & 3: Refer to APPENDIX A.

R25. Droplet separators downstream cooling coils shall be easily accessible and removable or alternatively have an access door and plenum between cooling coils and droplet separator as defined in APPENDIX A. In case that there is no compliant space between cooling coil and droplet separator and the droplet separator itself is easily removable, the length (in air direction) of the removed droplet separator can be used as available length for IMC of the cooling coil.

Level 1, 2 & 3: Requirement applied

R26. For easy removal of droplet separators, these shall be side removable in parts with maximum weight of 25 kg and maximum width of 1000 mm.

Level 1, 2 & 3: Requirement applied

f. Requirement regarding filter maintenance

R27. Filter change shall be possible from the dirty air side or by side removal. The installed filter frame shall correspond to the filter class installed and the manufacturer shall be certified minimum for the installed filter bypass leakage. In any case the requirements for sufficient space and easy access for IMC shall be maintained.

Level 1: Requirement applied

Level 2 & 3: Requirement applied and the complete filter(s) frame shall be sealed to the casing frame.

R28. Filter chambers shall be accessible for the IMC works. For unit with internal heights > **1600** mm; the access from both sides (upstream and downstream the filter) shall be possible. For that reason an access door on clean air side is mandatory. This requirement is achieved by default for side removable filter.

Level 1, 2 & 3: Requirement applied

R29. During filter maintenance, gasket shall be checked and changed if necessary.

Level 1, 2 & 3: Requirement to be included in the IOM.

g. Other requirements related to casing

R30. To avoid condensation, the certified model box shall have a minimum thermal bridging class of **X**.

Level 1&2: X = TB3

Level 3: X = TB2

R31. The certified model box shall have at least a tightness class of **X** and the Real Unit shall have at least a tightness class of **Y**.

Level 1 & 2: X = L2 (M) & Y = L2 (R)

Level 3: X = L1 (M) & Y = L1 (R)

R32. All drain pans, condensate trays and water tanks shall have a sufficient slope from any point of the bottom to the drain tube. The requirement is deemed to be fulfilled, if after filling them with 5 l/m² water, at least the percentage **X** has been drained off over a period of 10 minutes.

Level 1, 2 & 3: X = 95% (25 cl/m² of remaining water)

Note: The manufacturer shall provide the appropriate material to test this requirement during the audit

R33. Drain pipes of unit shall have a diameter of at least 40 mm and sufficient slope and run via a siphon with free discharge into the sewer system. A backflow protection is mandatory for negative pressures. In case it is not provided by the manufacturer, it shall be stated in the IOM.

Level 1, 2 & 3: Requirement applied

R34. Drains with positive and negative pressure levels shall be constructed separately with each having an individual siphon.

Level 1, 2 & 3: Requirement applied

R35. All connecting pipes passing through the casing where there is a risk of condensation shall be insulated.

Level 1, 2 & 3: Requirement applied.

V.3 Air Treatment

a. Filter

R36. A minimum ePM10 50% filtration stage shall be installed before the first component of any air stream (except dampers or filter pre-heater)

Level 1, 2 & 3: Requirement applied

R37. Air filters shall be selected and arranged in order to ensure a good incoming air quality (as a minimum). The filter efficiency according to EN 16890:2016of the filters shall be certified by a certification body accredited ISO 17065:2012.

Level 1 & 2: The filtration efficiency at 0.4 µm of all filters installed shall be equivalent to an ePM10 50% filter on the exhaust side and to an ePM1 50% filter on the supply side.

Level 3: The filtration efficiency at 0.4 µm of all filters installed shall be equivalent to an ePM10 50% filter on the exhaust side and to an ePM1 85% filter on the supply side.

R38. Manufacturer shall ensure that closed cell gasket is used and that the seal is properly fastened. The section related to non-metallic materials (test reports from hygiene institute according EN ISO 846:2019) shall be applied.

Manufacturer shall ensure that closed cell gasket is used and that the seal is properly fastened.

Level 1 & 2: Requirement applied

Level 3: Level 1 & 2 requirements **and** the gasket shall be either fixed on the filter frame and changeable or on the filter cell.

R39. Bag filter must be in vertical position (this requirement does not apply to rigid filters). It shall be clearly indicated in the IOM that the filter shall always be in a vertical position, it is also recommended to put a label on the unit.

Level 1, 2 & 3: Requirement applied

R40. To facilitate the maintenance of the air filter the following information shall be permanently indicated on the air-filter chamber:

- Dimensions
- Filter class:
  - For medium and fine filters, it shall be according to EN 16890:2016.
  - For high efficiency filters it shall be according to EN 1822:2019.
- Number of air filters
- Actual air volume of the installed system
- Final pressure drop based on the fan's characteristics.

Level 1, 2 & 3: Requirement applied

R41. Each filter stage shall be equipped with a differential-pressure gauge. The measuring display device shall be easily accessible and easily readable by future users.

Level 1 & 2: For each filter a visual signaling or an alarm in the control system is mandatory. For units to be installed outdoor liquid manometer is not allowed.

Level 3: For each filter an alarm in the control system is mandatory. For units to be installed outdoor liquid manometer is not allowed.

Note**:** Should the control system be delivered by the manufacturer, the requirements apply. Should they not, the requirement shall be written in the IOM.

R42. The supply side shall be filtered by two filter stages.

Level 1: No requirements

Level 2 & 3: Requirement applied **and** the first stage of filter class shall be at least **ePM10 50%**.

Note: if a third stage filter is required, it can be present within the unit or outside the unit. Therefore, this is not in the scope of this programme.

R43. Recirculated air shall be filtered with the same requirement as defined under R36 for supply air filter.

Level 1 & 2: Requirement applied

Level 3: No recirculated air shall be allowed.

b. Cooling and Heating Coil

R44. For energy and hygiene reasons the distance between the fins of the coolers that can dehumidify shall be at a minimum **Y** mm, otherwise, the distance between fins shall be at a minimum **X** mm.

Note: This applies also to cooling coil within run around coil

Level 1 & 2: X_{min} = 2.0 mm and Y_{min} = 2.5 mm

Level 3: X_{min} = 2.5 m and Y_{min} = 3.0 mm

R45. Air heaters, which are used for drying before the first filter stage, shall guarantee a minimum distance between the fins of at least 4 mm.

Level 1, 2 & 3: Requirement applied

R46. The fins shall have a *minimum* thickness of X.

Level 1, 2 & 3: X_{min} = 0.10 mm

R47. For hygiene reasons, coolers with dehumidification shall not be arranged immediately before air filters or silencers. Fans, heaters or droplet separators shall be installed in between to limit the relative humidity.

Selection software shall alert the user that cooler with dehumidification shall not be arranged immediately before air filters or silencers.

Level 1, 2 & 3: Requirement applied

c. Humidifier

R48. For clean application, humidifier shall be installed with at least an element (Coil, fan, heat exchanger, droplet separator) between humidifier and final filter or silencers.

A maximum of 90% RH is allowed before each filter section or silencer.

Level 1, 2 & 3: Requirement must be included in the IOM of the product.

d. Dehumidifier

R49. Any solid or liquid absorbent shall be harmless, a test report showing the compliance of the product used shall be provided.

Filtration downstream the desiccant unit shall be minimum **X.**

Level 1 & 2: Requirement applied and X = ePM1 50%

Level 3: Requirement applied and X = ePM1 85%

R50. No moisture can carry over to the components or sections downstream of the coil.

Selection software to alert the user that cooler with dehumidification shall not be arranged immediately before air filters or silencers.

Level 1, 2 & 3: Requirement applied

e. Heat Recovery System (HRS)

R51. The coils in the run around coils shall comply with the requirements of coils.

Level 1, 2 & 3: Refer to V.3b.

R52. Heat exchangers shall be easy to clean and to disinfect in order to avoid any kind of contamination.

Level 1, 2 & 3: Requirement applied

R53. Cross contamination

Level 1: For rotary heat exchanger, cross contamination between extract air and supply air at design condition shall be limited to EATR ≤ 5%. To assess EATR, both the leakage across the heat recovery device and, if applicable, the leakage across partition walls between supply part and extract part shall be considered.

Evaluation of the leakage: Leakage shall be based on the calculated operating pressure in the unit sections at design pressure drop for components and design external pressure. External pressure in the calculation is set at 50 Pa at the non-building side (if ducted) and the remainder at the building side (EN 13053:2019 §5.2.3.1.1.1)

OR The final supply air shall be filtered as the supply air defined under V.3a

OR The return air shall be filtered as the supply air defined under V.3a.

OR No requirement if the air handling unit is equipped with a recirculation damper.

Level 2: For rotary heat exchanger, cross contamination between extract air and supply air at operational condition shall be limited to EATR ≤ 5%. To assess EATR, both the leakage across the heat recovery device and, if applicable, the leakage across partition walls between supply part and extract part shall be considered.

Evaluation of the leakage: Leakage shall be based on the calculated operating pressure for worst possible operational conditions. Worst possible operational conditions exist when pressure differential between supply part and extract part are the lowest:

- For the supply part the highest pressure drop of components upstream the fan and lowest pressure drop for components downstream the fan shall be considered for components with variable pressure drop (filters, dry/wet heat exchangers).
- For the extract part the lowest pressure drop of components upstream the fan and highest pressure drop for components downstream the fan shall be taken for components with variable pressure drop.

System failure do not have to be considered. External pressure in the calculation is set at 50 Pa at the non-building side (if ducted) and the remainder at the building side (EN 13053:2019 §5.2.3.1.1.1)

OR The final supply air shall be filtered as the supply air defined under V.3a

OR The return air shall be filtered as the supply air defined under V.3a.

OR No requirement if the air handling unit is equipped with a recirculation damper.

Level 3: For rotary heat exchanger, cross contamination between extract air and supply air at operational condition shall be precluded (EATR = 0%).

A positive pressure between supply side and extract side shall be ensured for the heat recovery section and, if applicable, partition walls between the two air streams.

Rotary heat exchangers shall be equipped with a purging sector with sufficient purge angle adapted to the nominal rotor speed.

A pressure control system with differential pressure sensor accross the sections with the lowest possible pressure difference shall safeguard this requirement.

If a lower value is measured than the minimum permissible value set at 50 Pa, the control system will proportionally (further) close an extract air inlet damper and/or generate an alarm.

The system shall be evaluated as described under level 2.

OR No requirements if the two airstreams are fully separated by individual casings and split heat recovery.

f. Fans

R54. Fans and fan drives shall be used rather than belt driven fans.

If a belt driven fans or fans with housing are used refer to V.2e for cleaning and maintenance.

In case of use of a V-belt driven fan (exception: flat-belt drives), an additional filtration stage shall be installed immediately downstream of the fan (before any other component). The filtration efficiency of this filtration stage shall be at least equal to the highest filtration efficiency installed upstream of the fan (with a minimum of ePM10 50%).

An inspection window plus inspection light for checking the visual aspect of the belt shall be installed (for any type of belt).

Level 1: Requirement applied

Level 2 & 3: Requirement applied and the inspection window and inspection light is mandatory for any type of fans for units with an internal height above 1.3 m.

R55. Fans shall be easily accessible for maintenance as described under V.2e.

Definition of removable fan:

- All screws or similar fixings visible when opening door or hatch.
- Enough space for screws or fixing to be loosen and replaced with a simple tool (spanner, screwdriver, etc. or no tool at all) unless a special tool is provided by Manufacturer.
- Withdrawal of the fan can be performed by maintenance personal only, without the help of an electrician (No need to undo electrical connection, only mechanical disassembly and only opening of electrical socket is allowed).

If fans can be removable no additional requirements, otherwise following requirements applied:

Level 1: Fan shall be accessible from one side according to APPENDIX A for ‘Access and Space’.

Level 2&3: In case of plug fan only:

- On supply side: fan shall be accessible from both sides with at least half of the IMC-L downstream after the motor and according to APPENDIX A for 'Access and Space' upstream the fan.
- On extract side: fan shall be accessible from both sides, at least half of the IMC-L downstream after the motor and according to APPENDIX A for 'Access and Space' upstream the fan. If the fan is the last component before the damper, an access shall be ensuring according to APPENDIX A for 'Access and Space' only upstream the fan.

For any other type of fans, fans shall be accessible from both sides according to APPENDIX A for 'Access and Space'.

If no electrical connection is delivered with the fan and the variable speed drive (VSD), then the requirement shall be included in the IOM.

R56. If the water drain of a fan with housing is sealed it shall be easily accessible for cleaning and maintenance purposes. If not, the fan shall be removable.

- Plug is visible when opening the door or hatch.
- Enough space for plug to be open and removed with a simple tool (spanner, screwdriver, etc. or no tool at all), unless a special tool is provided by Manufacturer.
- Possibility to mop and wipe water below the fan (Min space about 3 cm below fan).

Level 1, 2 & 3: Requirement applied

R57. Fans with housing shall have an easily removable inspection lid (applicable for nominal impeller diameters greater than 400mm):

- Lid and all its fixings visible when opening the door or Hatch (Units with air flow height below 1,6 meter) **OR**
- When entering the unit (Units with air flow height larger or equal to 1.6 meter) enough space to open and close latch with a simple tool (spanner, screwdriver, etc. or no tool at all) unless a special tool is provided by Manufacturer.

Level 1, 2 & 3: Requirement applied

g. Silencer

R58. *Minimum ePM10 50% filter shall be installed before the silencer on the supply airstream side.*

Level 1: No requirements

Level 2 & 3: Requirement applied

R59. Material lined with sound-absorbent components shall be abrasion resistant, harmless and shall resist to cleaning (e.g. fiber glass).

Proof by test reports from hygiene institute as per EN ISO 846:2019 shall be presented.

Certificate or technical report from supplier to be provided for fiber-glass compliance.

Level 1, 2 & 3: Requirement applied

VI. CERTIFIED PERFORMANCE REQUIREMENTS

Only the hygienic Air Handling Units are certified within this programme. For the certification of classic AHU please refer to theTCR ECP 05.

VII. TOLERANCES

All the requirements of the selected level must be met in order to get achieve the certification. Each level can be achieved through the following process:

Level 1	Level 2	Level 3
Level 1 requirements	Level 1 requirements	Level 1 requirements
	+ Level 2 requirements	+ Level 2 requirements
		+ Level 3 requirements

APPENDIX A. ACCESS AND SPACE

This appendix must be used to support R22, R24 and R25.

The following requirements apply for all levels:

Free access opening width OW: Free access opening width OW according to Figure 3 shall not be less than the minimum IMC-L (according to Table 1) minus 50 mm.

Free access opening height OH: Free access opening height OH according to Figure 3 shall be not less than IMC-H minus 80 mm. Only for units with IMC-H> 1.800mm OH shall have any value >1.720 mm.

IMC depth IMC-D: IMC-D shall be the complete internal AHU width according Figure 3

IMC height IMC-H: IMC-H shall be the complete internal AHU height according Figure 3

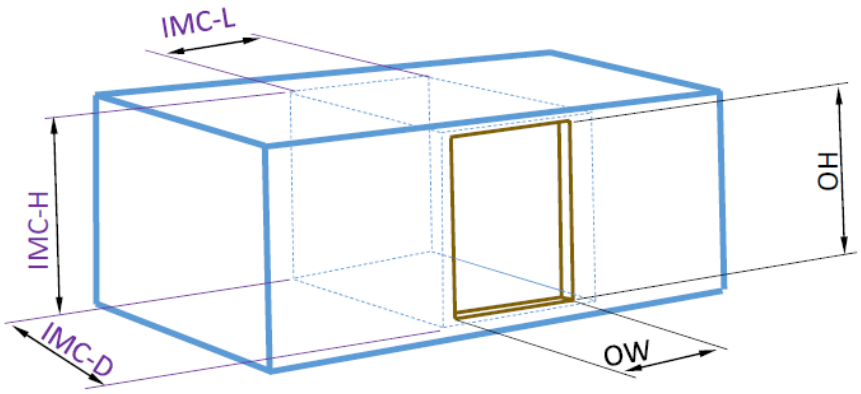

IMC-D: IMC Depth
IMC-H: IMC Height
IMC-L: IMC Length

OW: Opening Width
OH: Opening Height

Figure 3: Opening dimensions – IMC dimensions

The Table 1 must be used to support R22, R24 and R25. Table 1 lists the requirements for Access + Space: assessment of unit size to requirements on access opening size and space requirements for IMC. A tolerance of 1% is accepted for section sizes.

AHU SECTION SIZE (+- 1%)		ALL LEVELS		LEVEL 1	LEVEL 2	LEVEL 3
Internal unit depth (= IMC-D) per air stream	**Internal unit height (=IMC-H) per air stream**	**Designed type of IMC** (after entering the unit, all relevant inner surfaces shall be reached with the hand)		**Minimum IMC length IMC-L** (For removable components: including free space when component is removed)		
< 800mm	> 300 mm and <1900 mm	Standing outside and **entering the unit with the arm or with arm plus the shoulder**	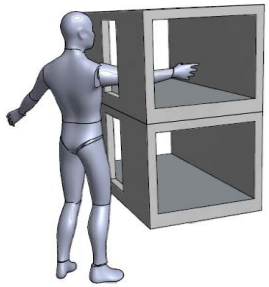	250 mm	400 mm	550 mm
≤1000mm	>400 mm and < 1900 mm			400 mm	400 mm	550 mm
<1300mm	>550 mm and ≤1300 mm	Standing outside and **entering the unit with the upper part of the body.**	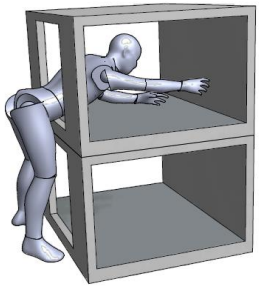	400 mm	400 mm	700 mm
Any	>600 mm and <=800 mm	Entering the unit partially or with the full body by **crawling and working in lying position.**	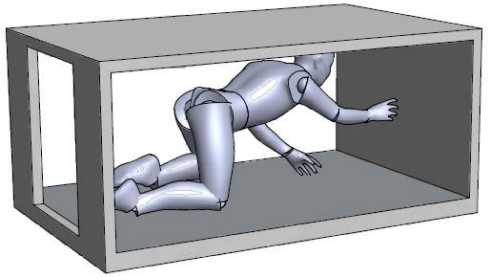	500 mm	500 mm	700 mm

AHU SECTION SIZE (+- 1%)		ALL LEVELS		LEVEL 1	LEVEL 2	LEVEL 3
Internal unit depth (= IMC-D) per air stream	**Internal unit height (=IMC-H) per air stream**	**Designed type of IMC** (after entering the unit, all relevant inner surfaces shall be reached with the hand)		**Minimum IMC length IMC-L** (For removable components: including free space when component is removed)		
Any	>800 mm and <=1600 mm	Entering the unit by **crawling on the knees and working in sitting, kneeling or squatting position.**	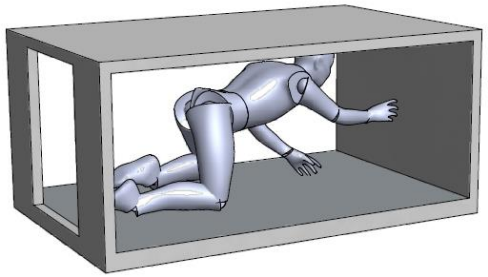	500 mm	500 mm	700 mm
Any	>1600	Entering the unit **by access on the feet and working in standing or at least bended position.**	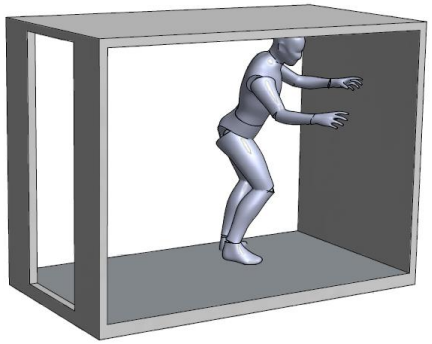	400 mm	500 mm	550 mm
Other size combinations		**Not Allowed**				

Table 1: Access and space requirements